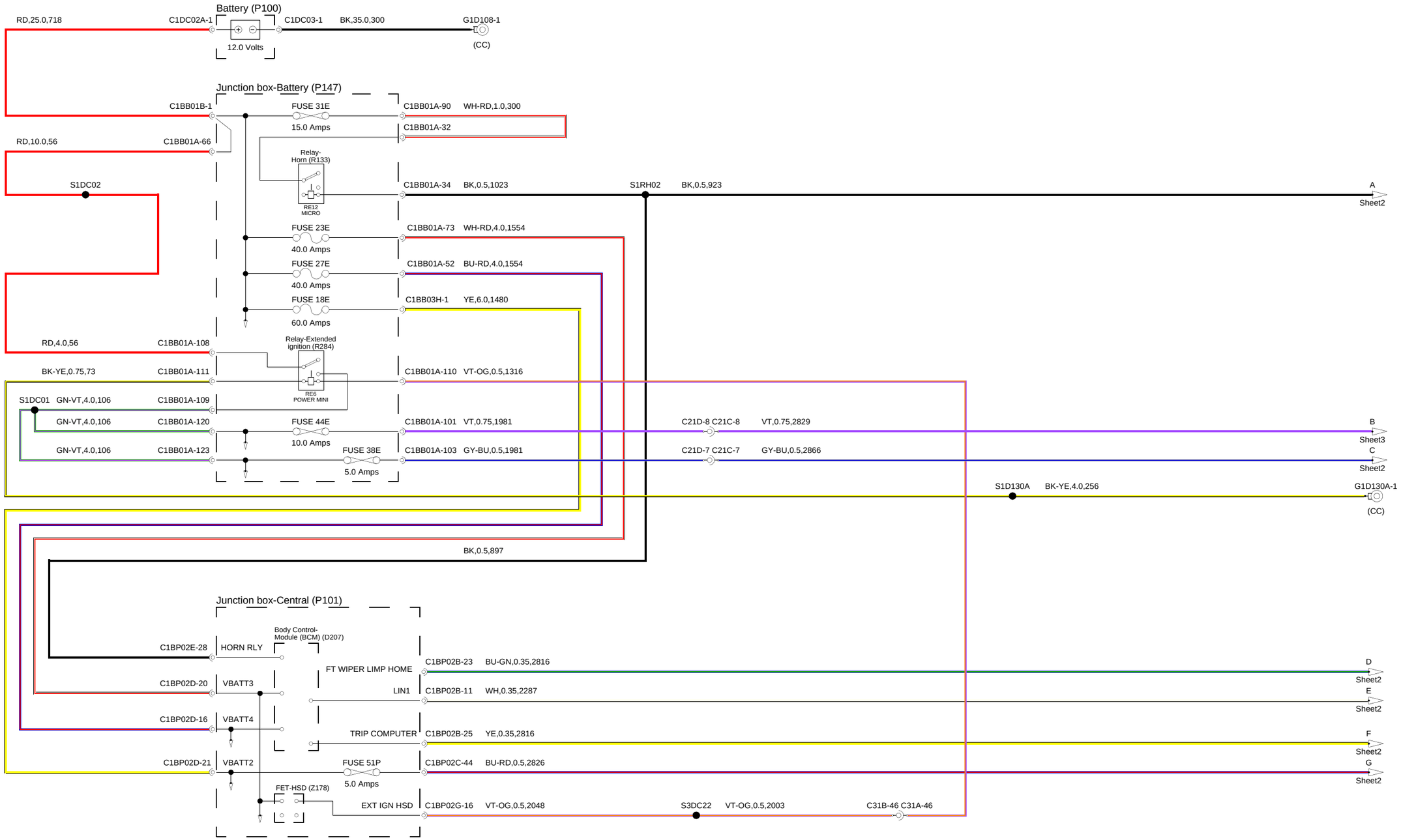
Battery (P100)
RD,25.0,718
C1DC02A-1
C1DC03-1
BK,35.0,300
G1D108-1
12.0 Volts
(CC)
Junction box-Battery (P147)
C1BB01B-1
FUSE 31E
15.0 Amps
C1BB01A-90
WH-RD,1.0,300
C1BB01A-32
RD,10.0,56
C1BB01A-66
Relay-Horn (R133)
RE12 MICRO
S1DC02
C1BB01A-34
BK,0.5,1023
S1RH02
BK,0.5,923
A
Sheet2
FUSE 23E
40.0 Amps
C1BB01A-73
WH-RD,4.0,1554
FUSE 27E
40.0 Amps
C1BB01A-52
BU-RD,4.0,1554
FUSE 18E
60.0 Amps
C1BB03H-1
YE,6.0,1480
RD,4.0,56
C1BB01A-108
Relay-Extended ignition (R284)
RE6 POWER MINI
BK-YE,0.75,73
C1BB01A-111
C1BB01A-110
VT-OG,0.5,1316
S1DC01
GN-VT,4.0,106
C1BB01A-109
GN-VT,4.0,106
C1BB01A-120
FUSE 44E
10.0 Amps
C1BB01A-101
VT,0.75,1981
C21D-8 C21C-8
VT,0.75,2829
B
Sheet3
GN-VT,4.0,106
C1BB01A-123
FUSE 38E
5.0 Amps
C1BB01A-103
GY-BU,0.5,1981
C21D-7 C21C-7
GY-BU,0.5,2866
C
Sheet2
S1D130A
BK-YE,4.0,256
G1D130A-1
(CC)
BK,0.5,897
Junction box-Central (P101)
Body Control-Module (BCM) (D207)
C1BP02E-28
HORN RLY
FT WIPER LIMP HOME
C1BP02B-23
BU-GN,0.35,2816
D
Sheet2
C1BP02D-20
VBATT3
LIN1
C1BP02B-11
WH,0.35,2287
E
Sheet2
C1BP02D-16
VBATT4
TRIP COMPUTER
C1BP02B-25
YE,0.35,2816
F
Sheet2
C1BP02D-21
VBATT2
FUSE 51P
5.0 Amps
C1BP02C-44
BU-RD,0.5,2826
G
Sheet2
FET-HSD (Z178)
EXT IGN HSD
C1BP02G-16
VT-OG,0.5,2048
S3DC22
VT-OG,0.5,2003
C31B-46 C31A-46

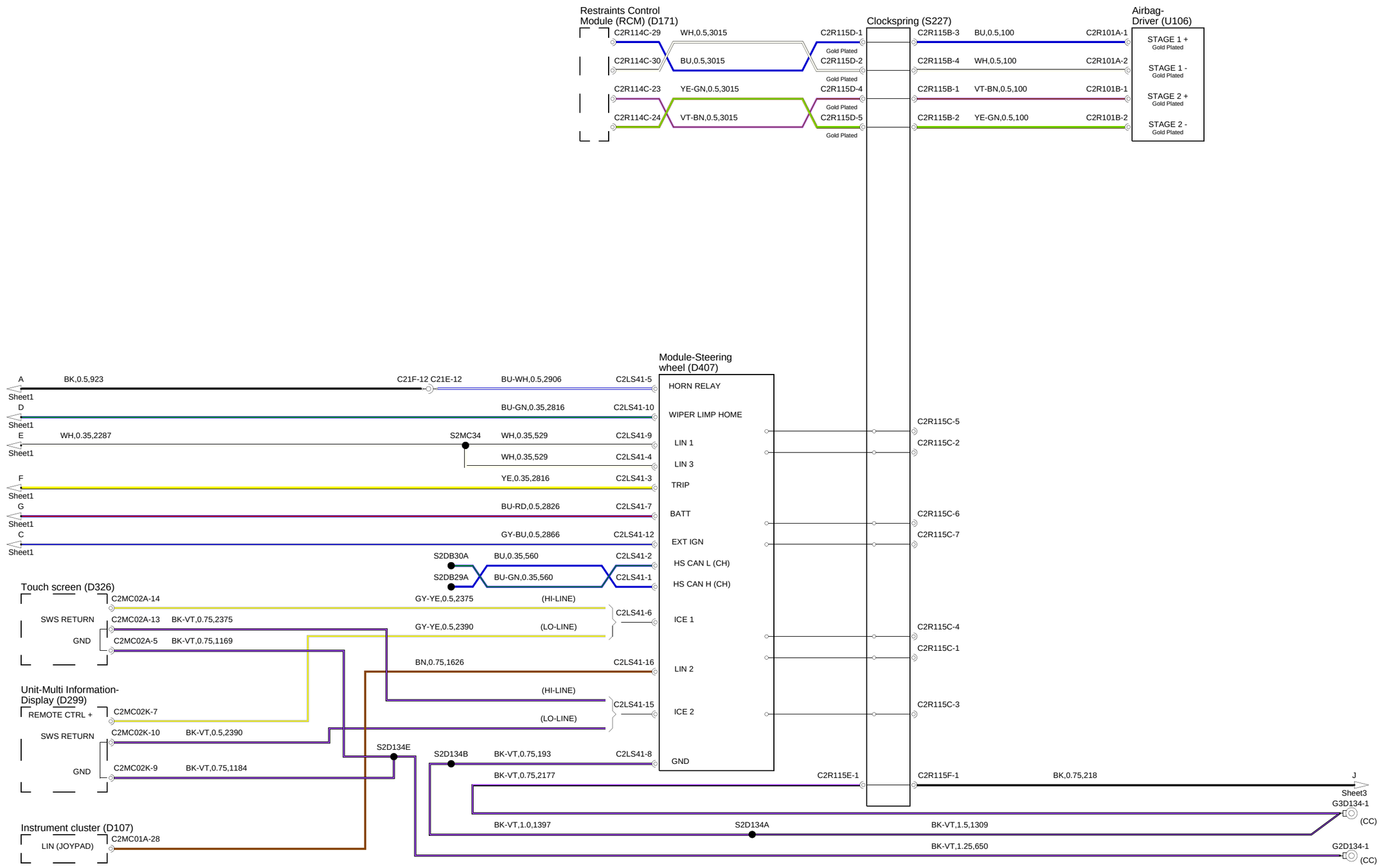
Restraints Control Module (RCM) (D171)
C2R114C-29
WH,0.5,3015
C2R114C-30
BU,0.5,3015
C2R114C-23
YE-GN,0.5,3015
C2R114C-24
VT-BN,0.5,3015
Clockspring (S227)
C2R115D-1
C2R115D-2
C2R115D-4
C2R115D-5
Gold Plated
C2R115B-3
BU,0.5,100
C2R115B-4
WH,0.5,100
C2R115B-1
VT-BN,0.5,100
C2R115B-2
YE-GN,0.5,100
C2R101A-1
C2R101A-2
C2R101B-1
C2R101B-2
Airbag-Driver (U106)
STAGE 1 +
STAGE 1 -
STAGE 2 +
STAGE 2 -
Module-Steering wheel (D407)
HORN RELAY
WIPER LIMP HOME
LIN 1
LIN 3
TRIP
BATT
EXT IGN
HS CAN L (CH)
HS CAN H (CH)
ICE 1
LIN 2
ICE 2
GND
A
BK,0.5,923
C21F-12
C21E-12
BU-WH,0.5,2906
C2LS41-5
Sheet1
D
BU-GN,0.35,2816
C2LS41-10
E
WH,0.35,2287
S2MC34
WH,0.35,529
C2LS41-9
C2LS41-4
F
YE,0.35,2816
C2LS41-3
G
BU-RD,0.5,2826
C2LS41-7
C
GY-BU,0.5,2866
C2LS41-12
S2DB30A
BU,0.35,560
C2LS41-2
S2DB29A
BU-GN,0.35,560
C2LS41-1
C2R115C-5
C2R115C-2
C2R115C-6
C2R115C-7
C2R115C-4
C2R115C-1
C2R115C-3
Touch screen (D326)
C2MC02A-14
GY-YE,0.5,2375
(HI-LINE)
SWS RETURN
C2MC02A-13
BK-VT,0.75,2375
GY-YE,0.5,2390
(LO-LINE)
C2LS41-6
GND
C2MC02A-5
BK-VT,0.75,1169
BN,0.75,1626
C2LS41-16
Unit-Multi Information-Display (D299)
REMOTE CTRL +
C2MC02K-7
(HI-LINE)
C2LS41-15
(LO-LINE)
SWS RETURN
C2MC02K-10
BK-VT,0.5,2390
S2D134E
S2D134B
BK-VT,0.75,193
C2LS41-8
GND
C2MC02K-9
BK-VT,0.75,1184
BK-VT,0.75,2177
C2R115E-1
C2R115F-1
BK,0.75,218
J
Sheet3
G3D134-1
(CC)
BK-VT,1.0,1397
S2D134A
BK-VT,1.5,1309
Instrument cluster (D107)
LIN (JOYPAD)
C2MC01A-28
BK-VT,1.25,650
G2D134-1
(CC)

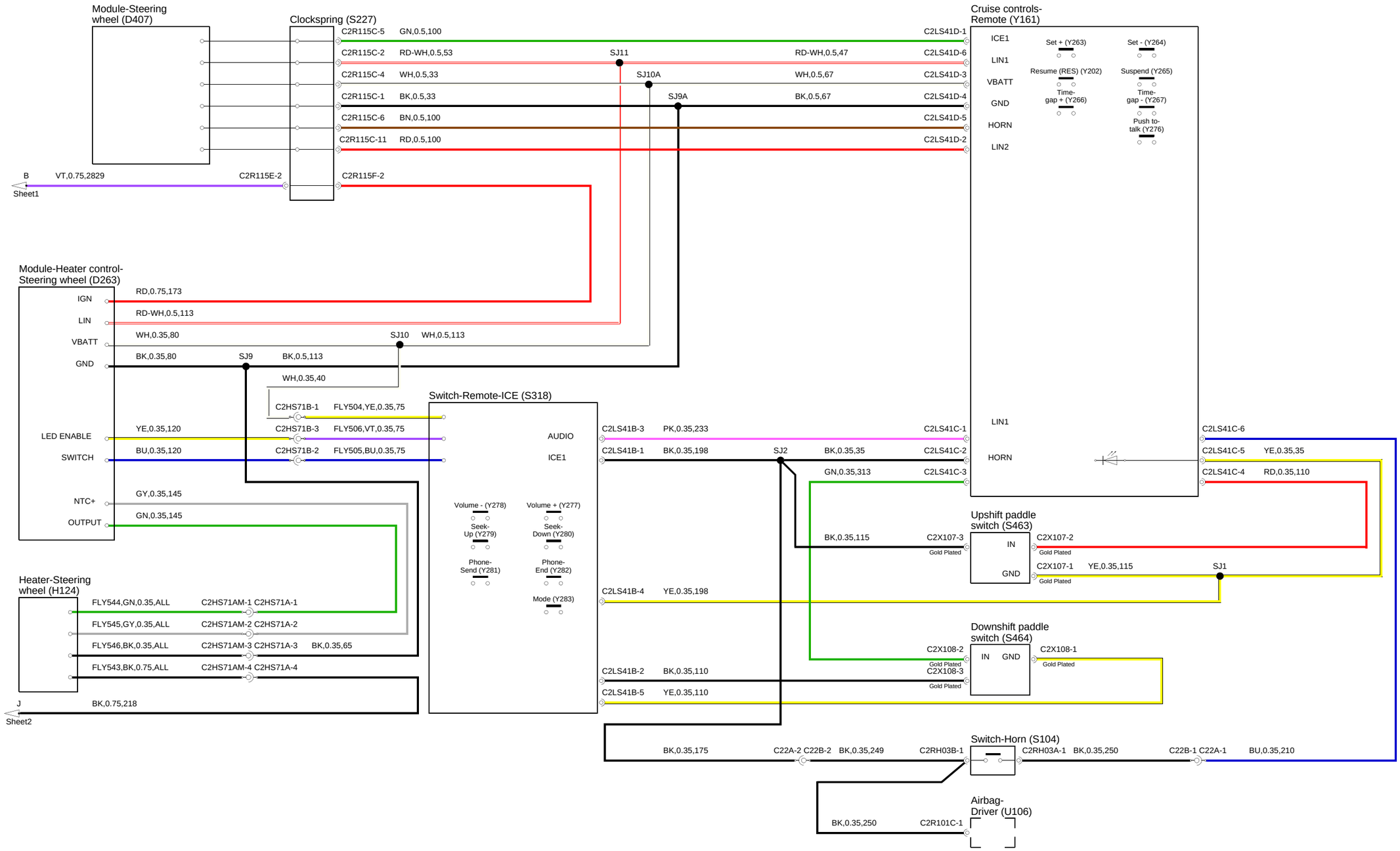
Module-Steering wheel (D407)
Clockspring (S227)
Cruise controls-Remote (Y161)
C2R115C-5 GN,0.5,100 C2LS41D-1
C2R115C-2 RD-WH,0.5,53 SJ11 RD-WH,0.5,47 C2LS41D-6
C2R115C-4 WH,0.5,33 SJ10A WH,0.5,67 C2LS41D-3
C2R115C-1 BK,0.5,33 SJ9A BK,0.5,67 C2LS41D-4
C2R115C-6 BN,0.5,100 C2LS41D-5
C2R115C-11 RD,0.5,100 C2LS41D-2
ICE1
LIN1
VBATT
GND
HORN
LIN2
Set + (Y263)
Set - (Y264)
Resume (RES) (Y202)
Suspend (Y265)
Time-gap + (Y266)
Time-gap - (Y267)
Push to-talk (Y276)
B VT,0.75,2829 C2R115E-2
Sheet1
C2R115F-2
Module-Heater control-Steering wheel (D263)
IGN RD,0.75,173
LIN RD-WH,0.5,113
VBATT WH,0.35,80 SJ10 WH,0.5,113
GND BK,0.35,80 SJ9 BK,0.5,113
WH,0.35,40
Switch-Remote-ICE (S318)
C2HS71B-1 FLY504,YE,0.35,75
LED ENABLE YE,0.35,120 C2HS71B-3 FLY506,VT,0.35,75
SWITCH BU,0.35,120 C2HS71B-2 FLY505,BU,0.35,75
AUDIO
ICE1
NTC+ GY,0.35,145
OUTPUT GN,0.35,145
Volume - (Y278)
Volume + (Y277)
Seek-Up (Y279)
Seek-Down (Y280)
Phone-Send (Y281)
Phone-End (Y282)
Mode (Y283)
Heater-Steering wheel (H124)
FLY544,GN,0.35,ALL C2HS71AM-1 C2HS71A-1
FLY545,GY,0.35,ALL C2HS71AM-2 C2HS71A-2
FLY546,BK,0.35,ALL C2HS71AM-3 C2HS71A-3 BK,0.35,65
FLY543,BK,0.75,ALL C2HS71AM-4 C2HS71A-4
J BK,0.75,218
Sheet2
C2LS41B-3 PK,0.35,233 C2LS41C-1
C2LS41B-1 BK,0.35,198 SJ2 BK,0.35,35 C2LS41C-2
GN,0.35,313 C2LS41C-3
LIN1
HORN
C2LS41C-6
C2LS41C-5 YE,0.35,35
C2LS41C-4 RD,0.35,110
Upshift paddle switch (S463)
BK,0.35,115 C2X107-3 Gold Plated
IN
GND
C2X107-2 Gold Plated
C2X107-1 YE,0.35,115 SJ1 Gold Plated
C2LS41B-4 YE,0.35,198
Downshift paddle switch (S464)
C2X108-2 Gold Plated
C2X108-3 Gold Plated
IN GND
C2X108-1 Gold Plated
C2LS41B-2 BK,0.35,110
C2LS41B-5 YE,0.35,110
Switch-Horn (S104)
BK,0.35,175 C22A-2 C22B-2 BK,0.35,249 C2RH03B-1
C2RH03A-1 BK,0.35,250 C22B-1 C22A-1 BU,0.35,210
Airbag-Driver (U106)
BK,0.35,250 C2R101C-1